INTELLIGENT MP SERIES

Up to 1500 Watts

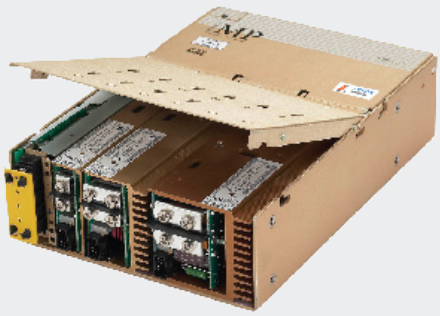

Advanced Energy iMP series is an AC input to DC output configurable power system consisting of a microprocessor-controlled PFC front end providing seven slots that accept intelligent DC-DC converter modules with single, dual or triple outputs ranging from 2 V to 60 V. Single output modules come in four power ranges that can be mixed and matched and connected in parallel or series to obtain thousands of output combinations customized to any application.

AT A GLANCE

Total Power

Up to 1500 W

Input Voltage

85 to 264 VAC
120 to 300 VDC

of Outputs

Up to 21

SPECIAL FEATURES

- Full medical EN60601 approval
- Intelligent I^2C control
- Voltage adjustment on all outputs (manual or I^2C)
- Configurable input and output OK signals and indicators
- Configurable inhibit/enable
- Configurable output UP/DOWN sequencing
- Configurable current limit (foldback or constant current)
- High power density (8.8 W/cu-in)
- Intelligent fan (speed control/fault status)
- Downloadable GUI from website
- Customer provided air option
- uP controlled PFC input with active inrush protection
- I^2C monitor of voltage, current, and temp
- Programmable voltage, current limit, inhibit/enable through I^2C
- Optional extended hold-up module (SEMI F47 compliance)
- Increased power density to 50% over standard MP
- External switching frequency sync input
- Optional conformal coating
- Industrial temp range (-40°C to 70°C)
- No preload required
- Industrial shock/vibration (> 50G's)

SAFETY

- UL UL60950/UL2601**
- CSA CSA22.2 No. 234 Level 5
- TUV EN60950/EN60601-1**
- BABT Compliance to EN60950/ EN60601 BS7002
- CB Certificate and report
- CE Mark to LVD

©2026 Advanced Energy Industries, Inc.

ELECTRICAL SPECIFICATIONS

Input	
Input range	85 to 264 VAC; 120 to 300 VAC (limited to 300 VDC in medical applications)
Frequency	47 to 63 Hz (iMP1 47 to 440 Hz)
Inrush current	40 A peak maximum (soft start)
Efficiency	Up to 85% @ full case load
Power Factor	0.99 typ. meets EN61000-3-2 (n/a @ 440 Hz)
Turn-on time	AC on 2.0 sec typ., inhibit/enable 150 ms typical Programmable delay; 50 ms internal turn-on delay (Dual Output only)
EMI filter	CISPR 22/EN55022 Level “B”**
Leakage current	300 µA max. @ 240 VAC; 47 - 63 Hz
Radiated EMI	CISPR 22/EN55022 Level “B”**
Holdover storage	20 ms minimum (independent of input Vac) additional 34 ms holdover storage with optional HUP module (SEMI F47 compatible). For iMP4 15 ms (low-line), 10 ms (high-line)
AC OK	> 5 ms early warning min. before outputs lose regulation Full cycle ride thru (50 Hz) (n/a on iMP4 > 750 W @ 90 VAC)
Harmonic distortion	Meets EN61000-3-2
Isolation	Meets EN60950 and EN60601 Input to output: 4000 Vac; input to ground: 1500 Vac; output to ground: 400 Vdc Meets 1 MOPP Primary to ground, 2 MOPP Primary to Secondary
Global inhibit / enable	TTL, Logic “1” and Logic “0”; configurable
Input fuse (internal)	iMP4: 16 A; iMP8: 20 A; iMP1: 25 A (both lines fused)
Warranty	2 years

ELECTRICAL SPECIFICATIONS (CONTINUED)

Output	
Adjustment range*	± 10% minimum all outputs (manual) (full module adjustment range using I²C)
Factory set point accuracy	1%
I²C output program accuracy	± 5%
Margining	± 4 - 6% nominal analog (single output module only)
Overall regulation	0.4% or 20 mV max. (1500 W modules 1% max.) (36 W modules 4% maximum)
Ripple	RMS: 0.1% or 10 mV, whichever is greater Pk-Pk: 1.0% or 50 mV, whichever is greater Bandwidth limited to 20 MHz
Dynamic response	< 2% or 100 mV, with 25% load step
Recovery time	To within 1% in < 300 µsec
Overcurrent protection**	Configurable through I²C (calibration required). Single output module and main output of the dual output module 105 - 120% of rated output current. Aux output of dual output module 105 - 140% of rated output current
Short-circuit protection	Protected for continuous short-circuit. Recovery is automatic upon removal of short
Overvoltage protection*	Configurable through I²C
	Single output module: 2 to 5.5 V 122 to 134%; 6 to 60 V 110 to 120%
	Dual output module: 2 to 6 V 122 to 134%; 8 to 28 V 110 to 120%
	Triple output module: 110 - 120% of highest voltage rating
Thermal protection* (OTP and OTW)	Configurable through I²C All outputs disabled when internal temp exceeds safe operating range. > 5 ms warning (AC OK signal) before shutdown
Remote sense	Up to 0.5 V total drop (not available on triple output module)
Single wire parallel	Current share to within 2% of total rated current
DC OK*	± 5% of nominal. Configurable through I²C
Minimum load	Not required
Housekeeping bias voltage	5 Vdc @ 1.0 A max. present whenever AC input is applied
Module inhibit*	Configured and controlled through I²C
Switching frequency	250k Hz accepts external sync signal
Output/Output isolation	> 1 Megohm, 500 V
External sync	TTL clock input signal used to adjust switching frequency. Frequency 500 kHz ± 20%; Duty cycle 40 - 55%

* Can be controlled via I²C
** Controlled via I²C but requires load calibration

INTERNAL PART NUMBER REFERENCE TABLE

Part #	Description	Case Code
73-580-0001i	iMP8 Case	iMP8
73-690-0001i	iMP1 Case	iMP1
73-540-0001i	iMP4 Case	iMP4

ENVIRONMENTAL SPECIFICATIONS

Operating temperature	-40°C to 70°C ambient. Derate each output 2.5% per degree from 50°C to 70°C. (-20°C start up)
Storage temperature	-40°C to +85°C
Electromagnetic susceptibility	Designed to meet EN61000-4; -2, -3, -4, -5, -6, -8, -11 Level 3
Humidity	Operating; non-condensing 10% to 95% RH
Vibration	IEC68-2-6 to the levels of IEC721-3-2
MTBF demonstrated	> 550,000 hours at full load, 220 Vac and 25 °C ambient conditions

OUTPUT MODULE LINE-UP

Module Code	1	2	3	5	4		—
Module Type	Single	Single	Single	Single	Dual		Triple
Max output power	210 W	360 W	750 W	1500 W	144 W		36 W
Max output current	35 A	60 A	150 A	300 A	10 A		2 A
Output voltages available	2 to 60 V	2 to 60 V	2 to 60 V	2 to 60 V	2 to 28 V		2 to 28 V
Standard voltage increments	25	25	25	18	16		18
					V1	V2	V1,V2,V3
Remote sense	Yes	Yes	Yes	Yes	Yes	Yes	No
Remote margin	Yes	Yes	Yes	Yes	No	No	No
V-Program - I^2C Control	Yes	Yes	Yes	Yes	Yes	Yes	No
Active Current Share	Yes	Yes	Yes	Yes	Yes	No	No
Module Inhibit - I^2C Control	Yes	Yes	Yes	Yes	Yes	Yes	Yes
Module Inhibit - Analog	Yes	Yes	Yes	Yes	Yes	No	No
Overvoltage/Overcurrent protection	Yes	Yes	Yes	Yes	Yes	Yes	Yes
Minimum load required	No	No	No	No	No	No	No
Slots occupied in any iMP case	1	2	3	4	1		1

OUTPUT MODULE VOLTAGE/CURRENT*

Voltage	Voltage Code	Single Output Module Code				Dual Output**		Triple Output			I²C Adjustment Ranges***
		1	2	3	5	4	4	-	-	-	
2 V	A	35 A	60 A	150 A	300 A	10 A	10 A	—	—	2 A	1.8 - 2.2
2.2 V	B	35 A	60 A	150 A	300 A	10 A	10 A	—	—	2 A	2.0 - 2.4
3 V	C	35 A	60 A	150 A	300 A	10 A	10 A	—	—	2 A	2.7 - 3.3
3.3 V	D	35 A	60 A	150 A	300 A	10 A	10 A	—	—	2 A	3.0 - 3.6
5 V	E	35 A	60 A	150 A	300 A	10 A	10 A	—	—	2 A	4.5 - 5.5
5.2 V	F	35 A	60 A	144 A	288 A	10 A	10 A	—	—	2 A	4.7 - 5.7
5.5 V	G	34 A	58 A	136 A	273 A	10 A	10 A	—	—	2 A	5.0 - 6.1
6.0 V	H	23 A	42 A	97.5 A	250 A	10 A*	10 A*	—	—	2 A	5.4 - 6.6
8.0 V	I	20 A	36 A	84.4 A	187.5 A	10 A	4 A	1 A	1 A	1 A	7.2 - 8.8
10 V	J	18 A	32 A	75 A	140 A	10 A	4 A	1 A	1 A	1 A	9.0 - 11.0
11 V	K	17 A	31 A	68 A	136.3 A	10 A	4 A	1 A	1 A	1 A	9.9 - 12.1
12 V	L	17 A	30 A	62.5 A	125 A	10 A	4 A	1 A	1 A	1 A	10.8 - 13.2
14 V	M	14 A	21 A	53.5 A	107 A	9 A	4 A	1 A	1 A	1 A	12.6 - 15.4
15 V	N	14 A	20 A	50 A	100 A	8 A	4 A	1 A	1 A	1 A	13.5 - 16.5
18 V	O	11 A	19 A	41.6 A	83.3 A	—	—	—	0.5 A	0.5 A	16.2 - 19.8
20 V	P	10.5 A	18 A	37.5 A	75 A	—	—	—	0.5 A	0.5 A	18.0 - 22.0
24 V	Q	8.5 A	15 A	30 A	62.5 A	4 A	2 A	—	0.5 A	0.5 A	21.6 - 26.4
28 V	R	6.7 A	11 A	26.8 A	53.5 A	3 A	2 A	—	0.5 A	0.5 A	25.2 - 30.8
30 V	S	6.5 A	11 A	25 A	50 A	—	—	—	—	—	27.0 - 33.0
33 V	T	6.2 A	10.9 A	22.7 A	35.8 A	—	—	—	—	—	29.7 - 36.3
36 V	U	5.8 A	10 A	20.8 A	35.8 A	—	—	—	—	—	32.4 - 39.6
42 V	V	4.2 A	7.5 A	16 A	35.7 A	—	—	—	—	—	37.8 - 46.2
48 V	W	4.0 A	7.5 A	15.6 A	31.2 A	—	—	—	—	—	43.2 - 52.8
54 V	X	3.7 A	6.0 A	13.9 A	27.7 A	—	—	—	—	—	48.6 - 59.4
60 V	Y	3.5 A	6.0 A	12.5 A	25 A	—	—	—	—	—	54.0 - 66.0
Contact Factory											
Special*	Z	35 A	60 A	150 A	300 A	—	10 A				2.3 - 2.6
Special*	Z	35 A	60 A	150 A	300 A	—	10 A				3.7 - 4.4
Special*	Z	20 A	36 A	80 A	140 A	—	8 A				6.7 - 7.1

* Increments of current not shown can be achieved by paralleling modules (add currents of each module selected).
**Total output power on dual model must not exceed 144 W.
*** For single output modules only.
Bold black lines reference lines indicate physical module groupings

OUTPUT MODULE VOLTAGE/CURRENT* (CONTINUED)

Parallel Codes

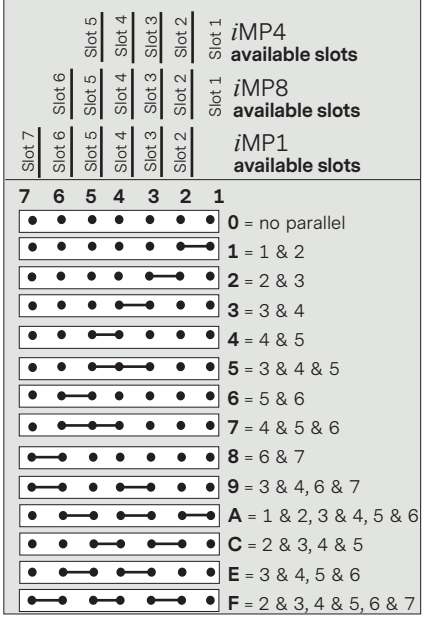

Ordering Notes

1. The cases and modules of both MP and iMP series can be interchanged to allow more flexibility. If intelligent modules are used with non-intelligent cases, a numeric code "4" is placed at the end of the module code (ex. 4LL0 becomes 4LL4).
2. USB to I^2C module order code 73-769-001

ORDERING INFORMATION

Case Size		Module/Voltage/Option Codes First - Module Code Second - Voltage Code Third - Option Code		Case Option Codes		Software Code		Hardware Code
iMP1*	-	3L0 - 2E2 - 1Q1 - 4LL0	-	00	-	A	-	###
Case Size (mm) 4 = 2.5" x 5" x 10"; 750 W - 1158 W, 5 Slots (63.5 x 127 x 254 mm) 8 = 2.5" x 7" x 10"; 1000 W - 1200 W, 6 Slots (63.5 x 177.8 x 254 mm) 1 = 2.5" x 8" x 11"; 1200 W - 1500 W, 7 Slots (63.5 x 203.2 x 279.4 mm)		**Module Codes** Module/voltage/option codes Module codes: (None) = 36 W triple O/P (1 slot) 1 = 210 W single O/P (1 slot) 2 = 360 W single O/P (2 slot) 3 = 750 W single O/P (3 slot) 4 = 144 W dual O/P (1 slot) 5 = 1500 W single O/P (4 slot) 6 - 9 = future **Voltage Codes:** See Output Module Voltage/ Current table above **Option Codes:** 0 = Standard 1 = Module enable 2 = Constant current 3 = 1 & 2 combined 4 = Set for use in standard (non-intelligent case) 5 = Shutdown mode for 1500 W 6 = 1 & 5 combined 7 - 9 = future		**Case Option Codes** First digit 0 - 9, A - Z parallel code (See Parallel Codes table above) Second digit 0 = No options 1 = Reverse air 3 = Global enable 4 = Fan idle with inhibit 5 = Opt 1 + Opt 3 6 = Opt 1 + Opt 4 7 = Opt 3 + Opt 4 8 = Opt 1 +3 +4 9 = RS485 73-544-002 A = RS485 73-544-002 + Reverse air C = Opt 3 + Opt 9 D = CAN BUS 73-544-003 E = Opt 3 + Opt D F = RS485 - MODBUS 73-544-005		Software code used for configuration change. "A" is standard		Factory assembled for hardware of firmware mods.

* Note: Add "E" after iMP4 to denote IEC input option.
e.g. iMP4E (Not available on iMP8 or iMP1)

ORDERING INFORMATION (CONTINUED)

Single

210 W

360 W

750 W

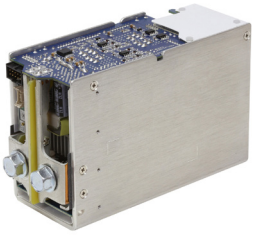

1500 W (2.0 to 8.0

1500 W (10 to 60 V)

1500 W with Bus Bar Adapter Option (used with the 10 to 60 V module)

iMP4 (AC input on opposite side)

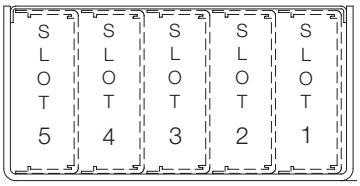

	Input	
	90 - 264 Vac	180 - 264 Vac
iMP4 = 2.5” x 5” x 10” 5 available slots (63.5 x 127 x 254 mm)	750 W max.	1158 W max.

iMP8 and iMP1

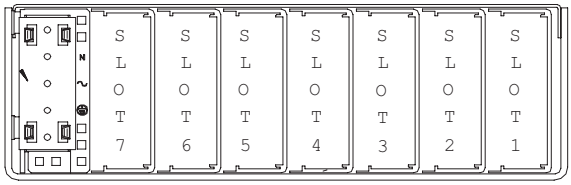

iMP1 only

	Input	
	85 - 264 Vac	180 - 264 Vac
iMP8 = 2.5” x 7” x 10” 6 available slots (63.5 x 177.8 x 254 mm)	1000 W max.	1200 W max.
iMP1 = 2.5” x 8” x 11” 7 available slots (63.5 x 203.2 x 279.4 mm)	1200 W max.	1500 W max.

Dual

144 W

Triple

36 W

PIN CONNECTORS

Figure 1. AC Input

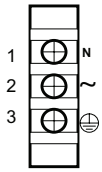

Figure 2. Connector J1

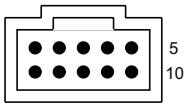

Mates with
Molex 90142-0010 Housing
90119-2110 Pin
Advanced Energy Connector Kit
PN: 70-841-004
Sager Electronics cable assembly
PN: 2174500059

Figure 3. Connector J2

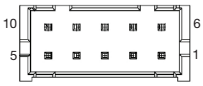

Mates with
Landwin 2050S1000 Housing
2053T011V Pin
or
JST PHDR-10VS Housing
JST SPHD-002T-P0.5 (28-24)
JST SPHD-001T-P0.5 (26-22)

Advanced Energy Connector Kit
PN: 70-841-023
Sager Electronics cable assembly
PN: 2174500058

AC Input	
Pin No.	**Function**
1	AC neutral
2	AC line (hot)
3	Chassis (earth) ground
PFC Input Connector（Control and signals）	
Pin No.	**Function**
1	Input AC OK - “emitter”
2	Input AC OK - “collector”
3	Global DC OK - “emitter”
4	Global DC OK - “collector”
5	External Sync
6	Global inhibit/optional enable logic “0”
7	Global inhibit/optional enable logic “1”
8	Global inhibit/optional enable return
9	+5 VSB housekeeping
10	+5 VSB housekeeping return
I^2C Bus Output Connector	
Pin No.	**Function**
1	No connection
2	No connection
3	No connection
4	Serial clock signal (SCL)
5	Serial data signal (SDA)
6	Address bit 0 (A0)
7	Address bit 1 (A1)
8	Address bit 2 (A2)
9	Secondary return (GND)
10	5 Vcc external bus (5 VCC. Bus)

MECHANICAL DRAWINGS

iMP Modules

DC-DC Converter Output Modules

Control Signal Information, J1 Control Connector		
Pin No.	**Function**	
1	+ Remote Sense	single or dual o/p main
2	Remote Margin / V. Program	single o/p
3	Margin High	single o/p
4	- Remote Sense / Margin Low	single or dual o/p main
5	Spare	
6	Module, Isolated Inhibit	single or dual o/p
7	Module Inhibit Return	single or dual o/p
8	Current Share (SWP)	single or dual o/p main
9	+ Remote Sense V2	dual o/p, single is spare
10	- Remote Sense V2	dual o/p, single is spare

* Note: All iMP modules have a green DCOK LED. (except for 36 W module)

Figure 4. Connector J1

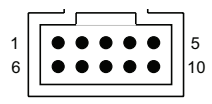

Mates with
Sager Electronics cable assembly
PN: 217450059

Single 210 Watt

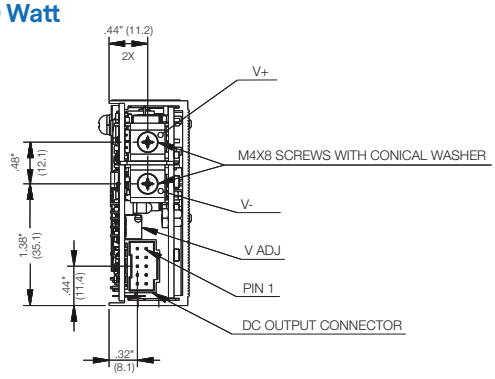

Single 360 Watt

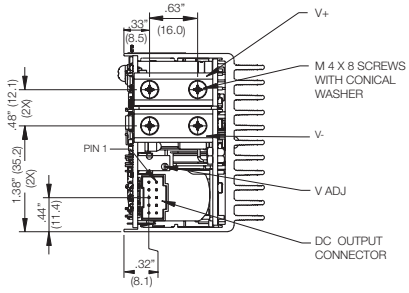

Single 750 Watt

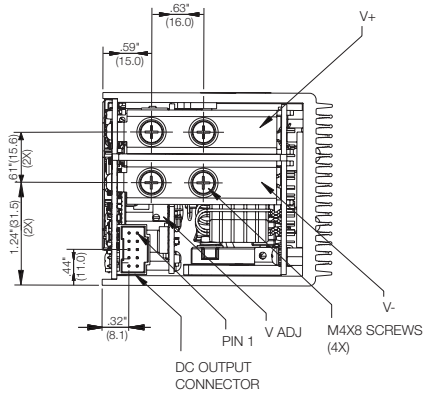

Single 1500 Watt 2-8 V

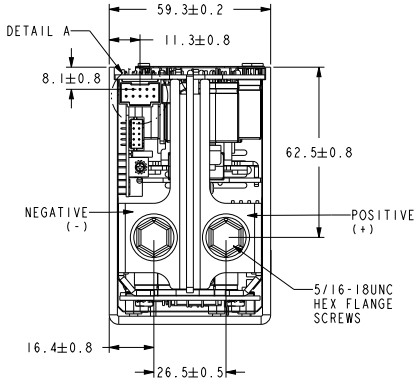

Single 1500 Watt 10-60 V

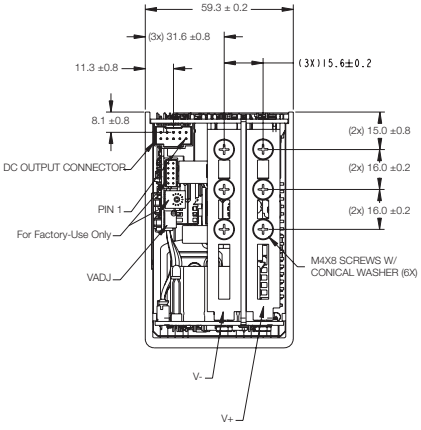

Dual 144 Watt

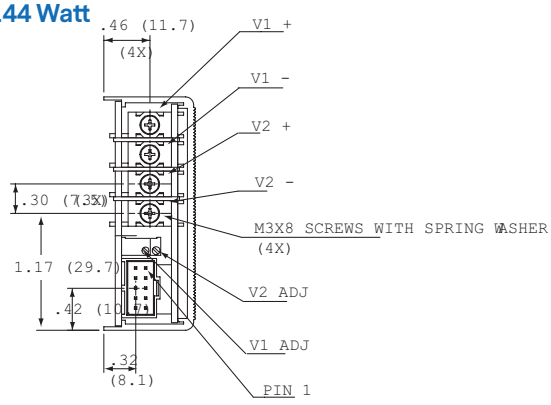

Triple 36 Watt

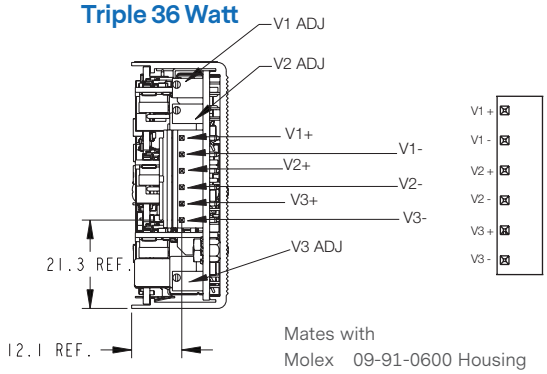

Mates with
Molex 09-91-0600 Housing
26-60-5060 Pin

IMP SERIES

iMP4 (750/1158 Watts Max)

5-Inch Case Size: iMP4: 2.5” x 5” x 10” (63.5 mm x 127 mm x 254 mm)

Weight: iMP4 Case: 3 lbs. · 360 W Single 1.0 lb. · 750 W Single: 1.6 lbs. 144 W Dual: 0.6 lb.

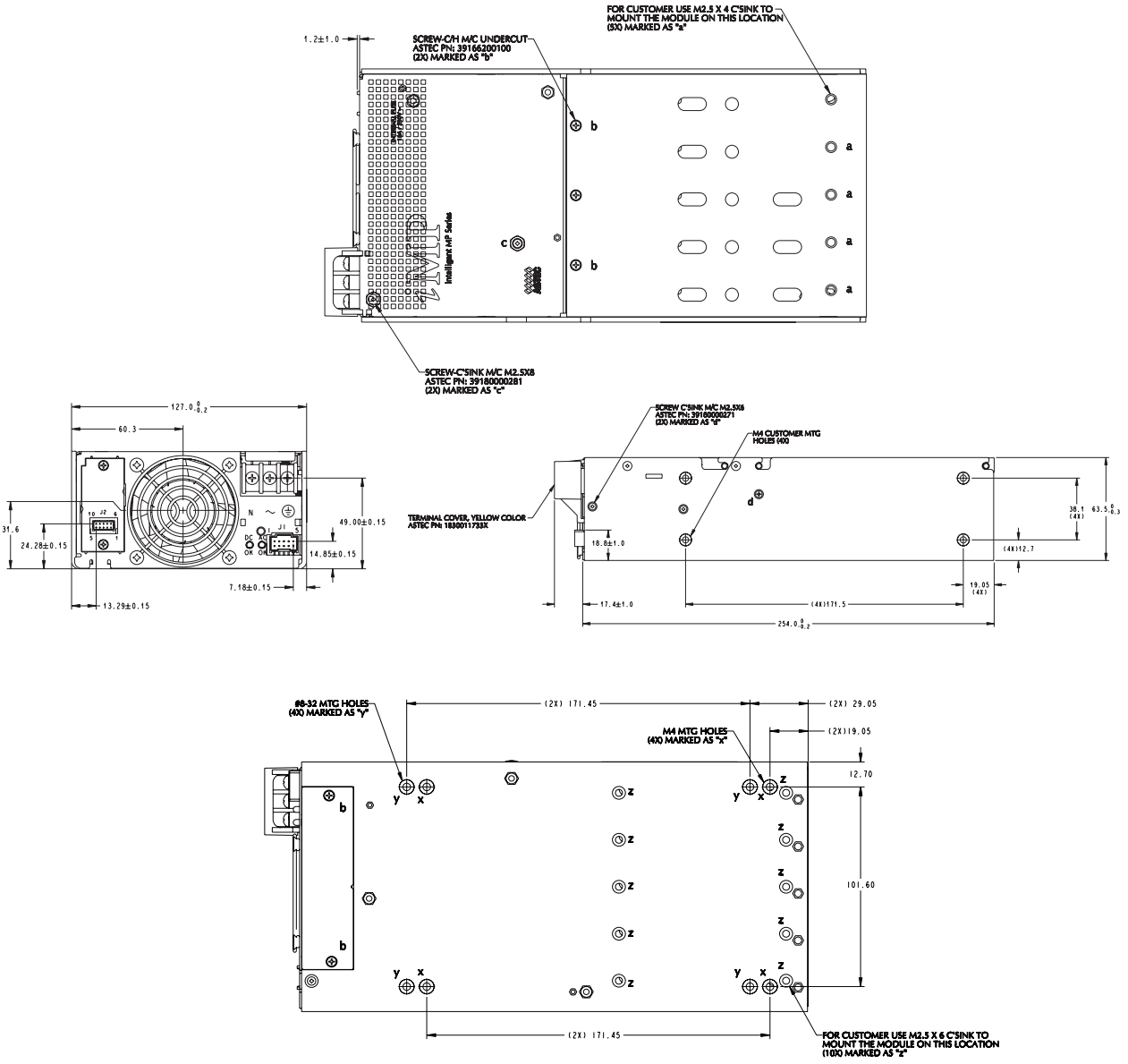

Notes:

1. Input: Barrier type. Three No. 6-32 B.H. screws (0.375” centers). Max torque: 6 in-lbs. (0.67 N-m). (Optional IEC input connector)
2. Control connectors: (J1) 10 position housing, gold plated contacts. Mates with Molex 90142-0010 housing with 90119-2110 crimp contacts (Molex C - Grid III Series). Connector kit includes mating connector and 10 pins, Astec part #70-841-004. (J2) 10 position housing (Landwin 2051P1000T). Mates with housing 2050S1000 (Landwin) with 2053T011P (Landwin) pins or JST PHDR-IOVS Housing and JST SPHD-002T-PO.5 pins.
3. Chassis material: aluminum with chemical film coating (conductive).
4. All dimensions are in millimeters and inches, and are typical.
5. Customer mounting -3 sides M4, bottom also includes 8-32 mounting holes. Max. penetration is 0.150” (3.8 mm). Max. torque: 5 in-lbs. (0.57 N-m).
6. Output module connections: All single O/P modules are M4 x 8 mm screws. Max. torque: 10 in-lbs. (1.13 N-m).
   Dual O/P module is M3 x 8 mm screws. Max. torque: 5 in-lbs. (0.57 N-m).

IMP SERIES (CONTINUED)

iMP8 (1000/1200 Watts Max)

7-Inch Case Size: iMP8: 2.5” x 7” x 10” (63.5 mm x 177.8 mm x 254 mm)

Weight: iMP8 Case: 4.1 lbs. · 210 W Single: 0.6 lb. · 360 W Single: 1.0 lb. 750 W Single: 1.6 lbs. 144 W Dual: 0.6 lb.

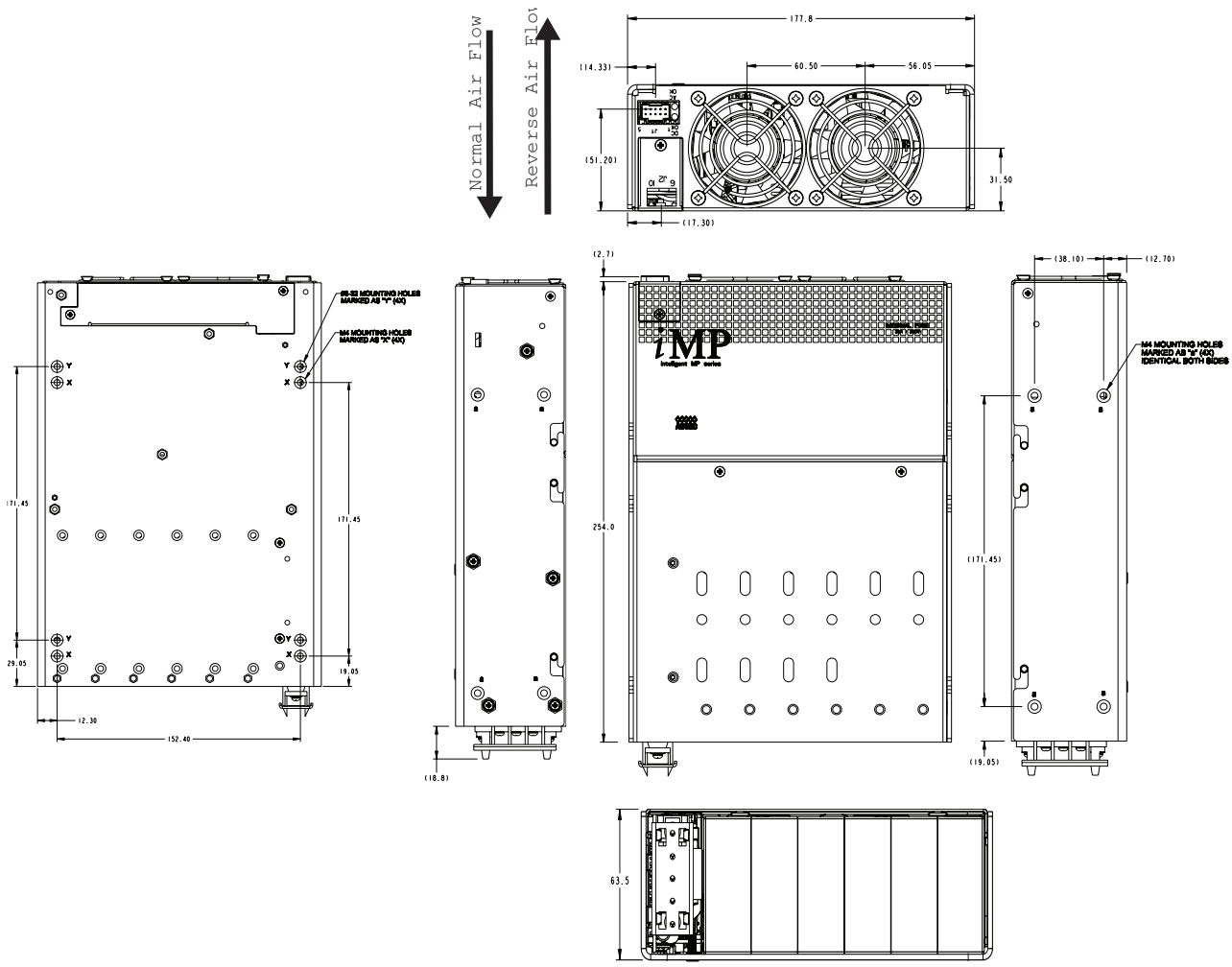

Notes:

1. Input: Barrier type. Three No. 6-32 B.H. screws (0.375” centers). Max torque: 6 in-lbs. (0.67 N-m).
2. Control connectors: (J1) 10 position housing, gold plated contacts. Mates with Molex 90142-0010 housing with 90119-2110 crimp contacts (Molex C - Grid III Series) Connector kit includes mating connector and 10 pins, Astec part #70-841-004. (J2) 10 position housing (Landwin 2051P1000T). Mates with housing 2050S1000 (Landwin) with 2053T011P (Landwin) pins or JST PHDR-IOVS Housing and JST SPHD-002T-PO.5 pins.
3. Chassis material: aluminum with chemical film coating (conductive).
4. All dimensions are in millimeters and inches, and are typical.
5. Customer mounting -3 sides M4, bottom also includes 8-32 mounting holes. Max. penetration is 0.150” (3.8 mm). Max. torque: 5 in-lbs. (0.57 N-m).
6. Output module connections: All single O/P modules are M4 x 8 mm screws. Max. torque: 10 in-lbs. (1.13 N-m). Dual O/P module is M3 x 8 mm screws. Max. torque: 5 in-lbs. (0.57 N-m).

IMP SERIES (CONTINUED)

iMP1 (1200/1500 Watts Max)

8-Inch Case Size: iMP1: 2.5” x 8” x 11” (63.5 mm x 203.2 mm x 279.4 mm)

Weight: iMP1 Case: 5.0 lb. · 210 W Single: 0.6 lb. · 360 W Single: 1.0 lb. 750 W Single: 1.6 lb. · 144 W Dual: 0.6 lb.

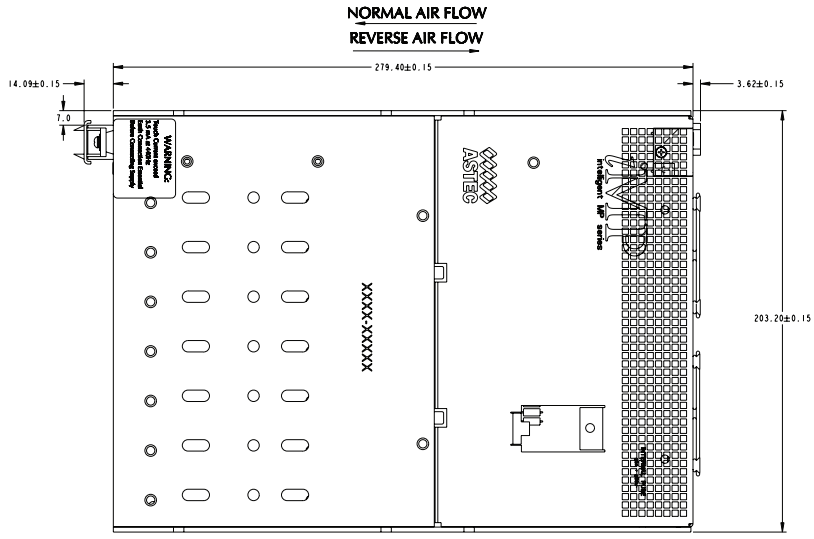

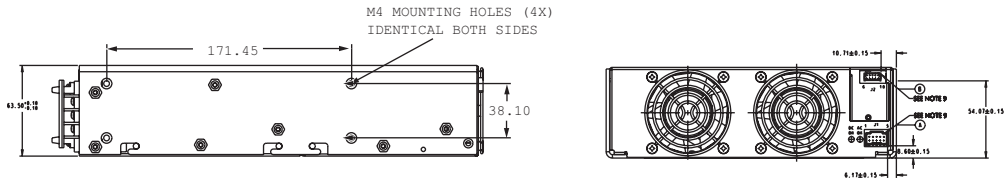

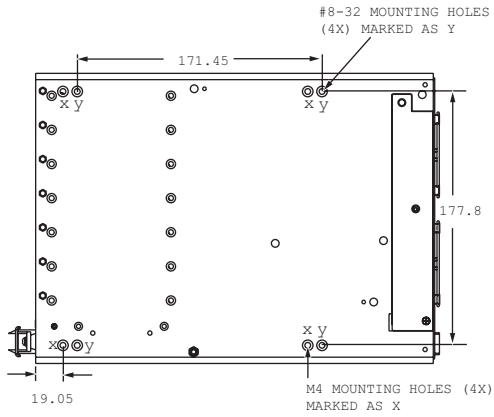

Notes:

1. Input: Barrier type. Three No. 6-32 B.H. screws (0.375” centers). Max torque: 6 in-lbs (0.67 N-m).
2. Control connectors: (J1) 10 position housing, gold plated contacts. Mates with Molex 90142-0010 housing with 90119-2110 crimp contacts (Molex C - Grid III Series). Connector kit includes mating connector and 10 pins, Astec part #70-841-004. (J2) 10 position housing (Landwin 2051P1000T). Mates with housing 2050S1000 (Landwin) with 2053T011P (Landwin) pins or JST PHDR-IOVS Housing and JST SPHD-002T-PO.5 pins.
3. Chassis material: aluminum with chemical film coating (conductive).
4. All dimensions are in millimeters and inches, and are typical.
5. Customer mounting -3 sides M4, bottom also includes 8-32 mounting holes. Max. penetration is 0.150” (3.8 mm). Max. torque: 5 in-lbs. (0.57 N-m).
6. Output module connections: All single O/P modules are M4 x 8 mm screws. Max. torque: 10 in-lbs. (1.13 N-m). Dual O/P module is M3 x 8 mm screws. Max. torque: 5 in-lbs. (0.57 N-m).

OPTIONAL CANBUS OR RS485 INTERFACE

The RS485/CAN-to-I²C uses 2 Input Protocols and 1 Output Protocol.
The Input Protocols used are RS485 using Modbus (Command Index: 0x01), and CAN using modified Modus (Command Index: 0x02).
The Output Protocol use is: I²C with SMBus support (Command Index: 0x80).

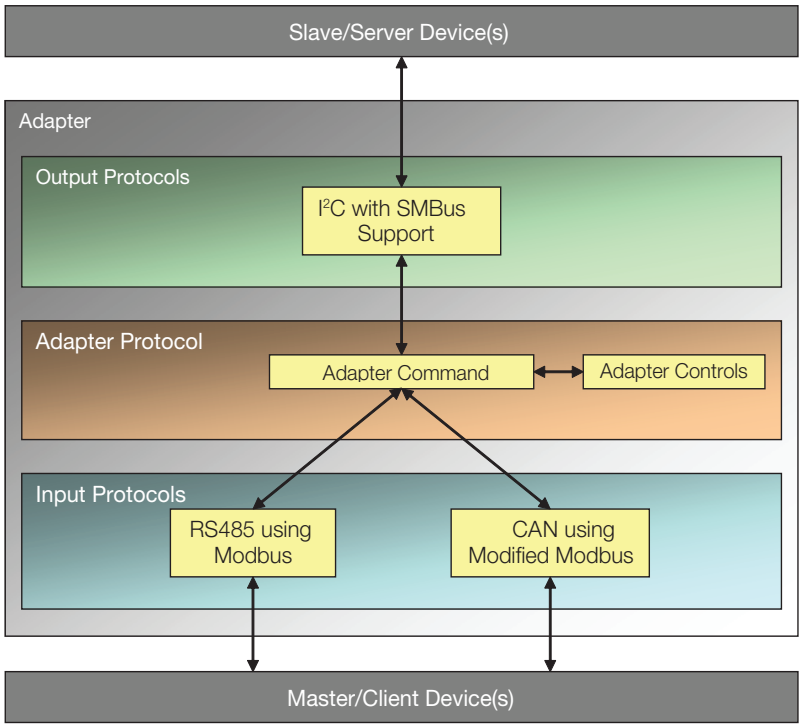

RS485/CAN - to - I²C

For detailed info, download the CAN / RS485 Interface Adapter Technical Reference Note from
https://www.advancedenergy.com/getmedia/ebd94954-c276-4086-9be0-63a1b20368a1/trn_can_rs485_interface_adapte1321396157_techref.pdf

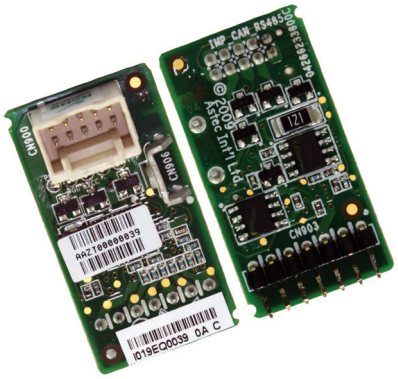

iMP CAN RS485

ABOUT ADVANCED ENERGY

Advanced Energy (AE) has devoted more than four decades to perfecting power for its global customers. AE designs and manufactures highly engineered, precision power conversion, measurement and control solutions for mission-critical applications and processes.

Our products enable customer innovation in complex applications for a wide range of industries including semiconductor equipment, industrial, manufacturing, telecommunications, data center computing, and medical. With deep applications know-how and responsive service and support across the globe, we build collaborative partnerships to meet rapid technological developments, propel growth for our customers, and innovate the future of power.

PRECISION | POWER | PERFORMANCE | TRUST

For international contact information,
visit advancedenergy.com.

powersales@aei.com (Sales Support)
productsupport.ep@aei.com (Technical Support)
+1 888 412 7832

Specifications are subject to change without notice. Not responsible for errors or omissions. ©2026 Advanced Energy Industries, Inc. All rights reserved. Advanced Energy® and AE® are U.S. trademarks of Advanced Energy Industries, Inc.

ENG-IMP-235-01 10.15.26